

YL-14LED-0056

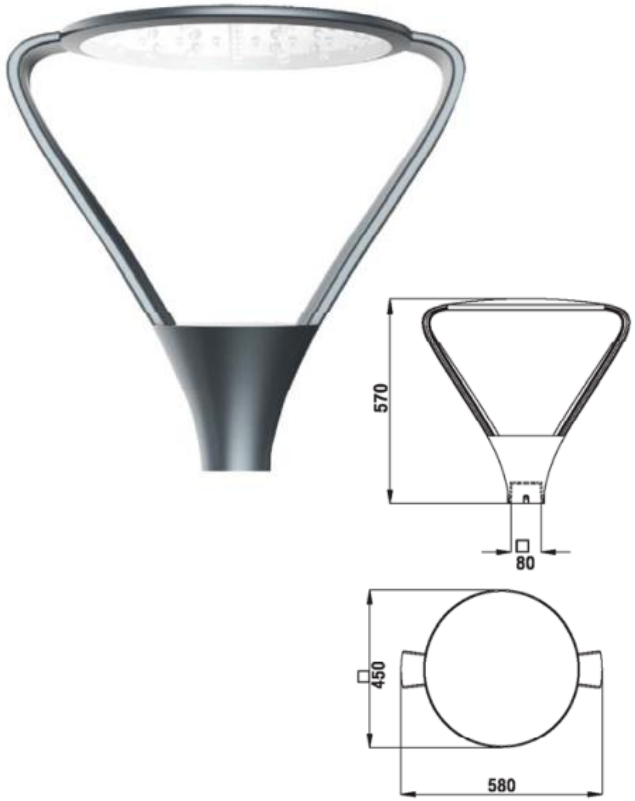

Specification

Product model:	YL-14LED-00056
Material:	Aluminium+PC cover
Product size:	580*570mm(D*H)
Led power:	30W ,40W,60W
Input voltage:	AC100-265V/50-60HZ
light lumious efficiency:	>100ml/w
Color temperature :	3000～6000K optional
working life:	>50000h
Surface treatment:	black, gray
installation diameter	76mm
Protection grade :	IP65
The environment temperature	-30℃-50℃
Packing weight :	9.1kg

Light Distribution Curve

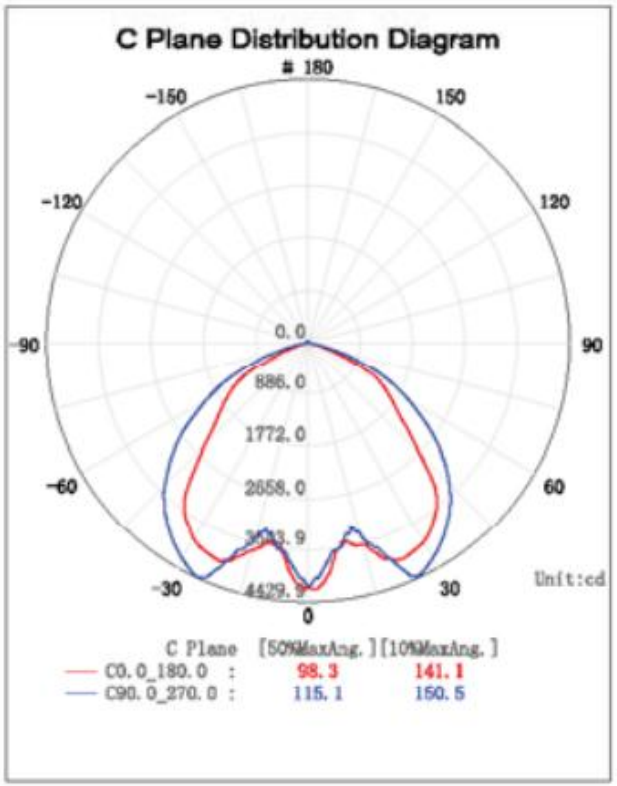

60W

